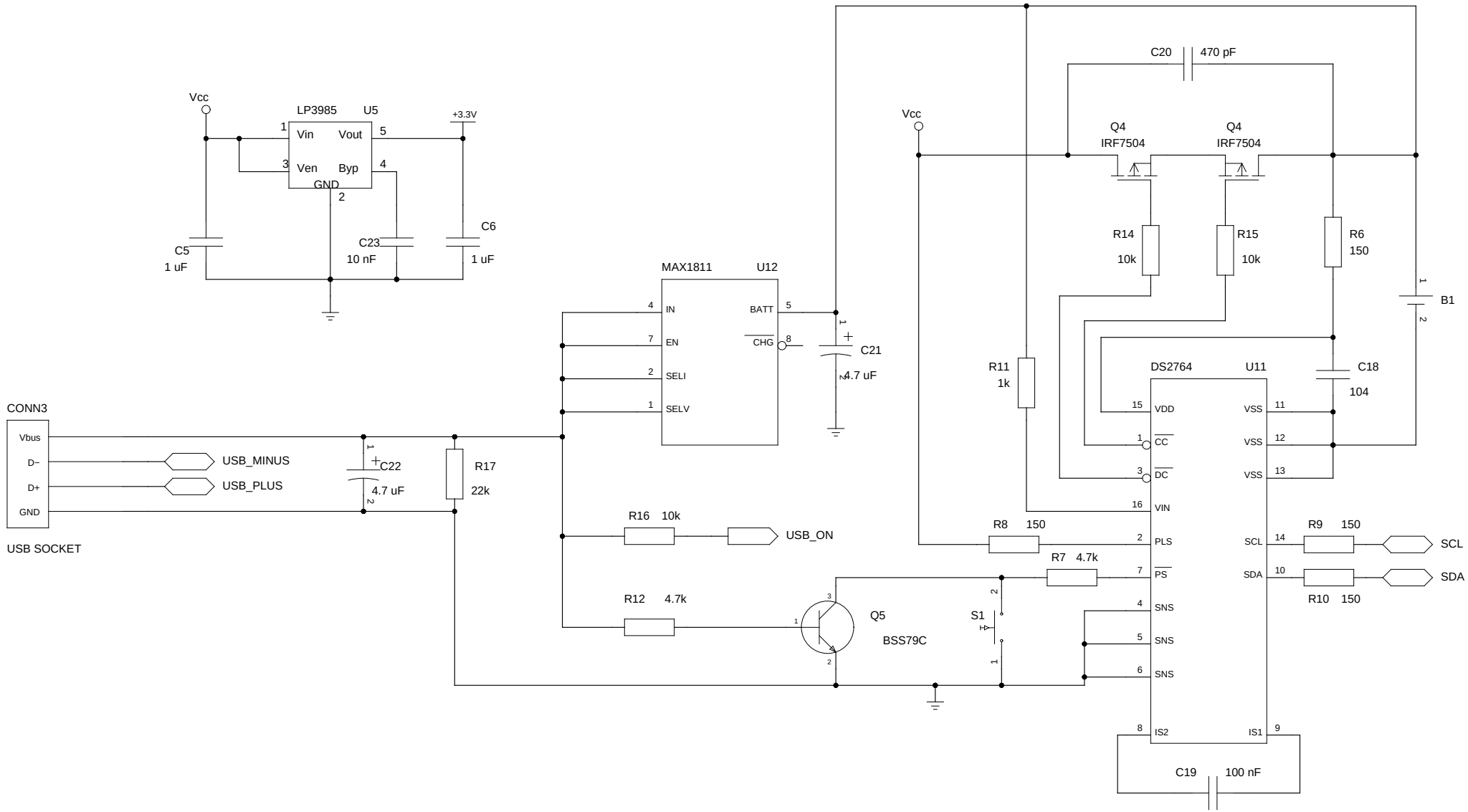
Vcc
LP3985
U5
Vin
Vout
Ven
Byp
GND
+3.3V
C5
1 uF
C23
10 nF
C6
1 uF
MAX1811
U12
IN
EN
SELI
SELV
BATT
CHG
C21
4.7 uF
CONN3
Vbus
D−
D+
GND
USB SOCKET
USB_MINUS
USB_PLUS
C22
4.7 uF
R17
22k
R16 10k
USB_ON
R12 4.7k
Q5
BSS79C
S1
C20 470 pF
Q4
IRF7504
Q4
IRF7504
R14
10k
R15
10k
R6
150
B1
R11
1k
DS2764
U11
C18
104
VDD
CC
DC
VIN
PLS
PS
SNS
SNS
SNS
IS2
VSS
VSS
VSS
SCL
SDA
IS1
R8 150
R7 4.7k
R9 150
SCL
R10 150
SDA
C19 100 nF

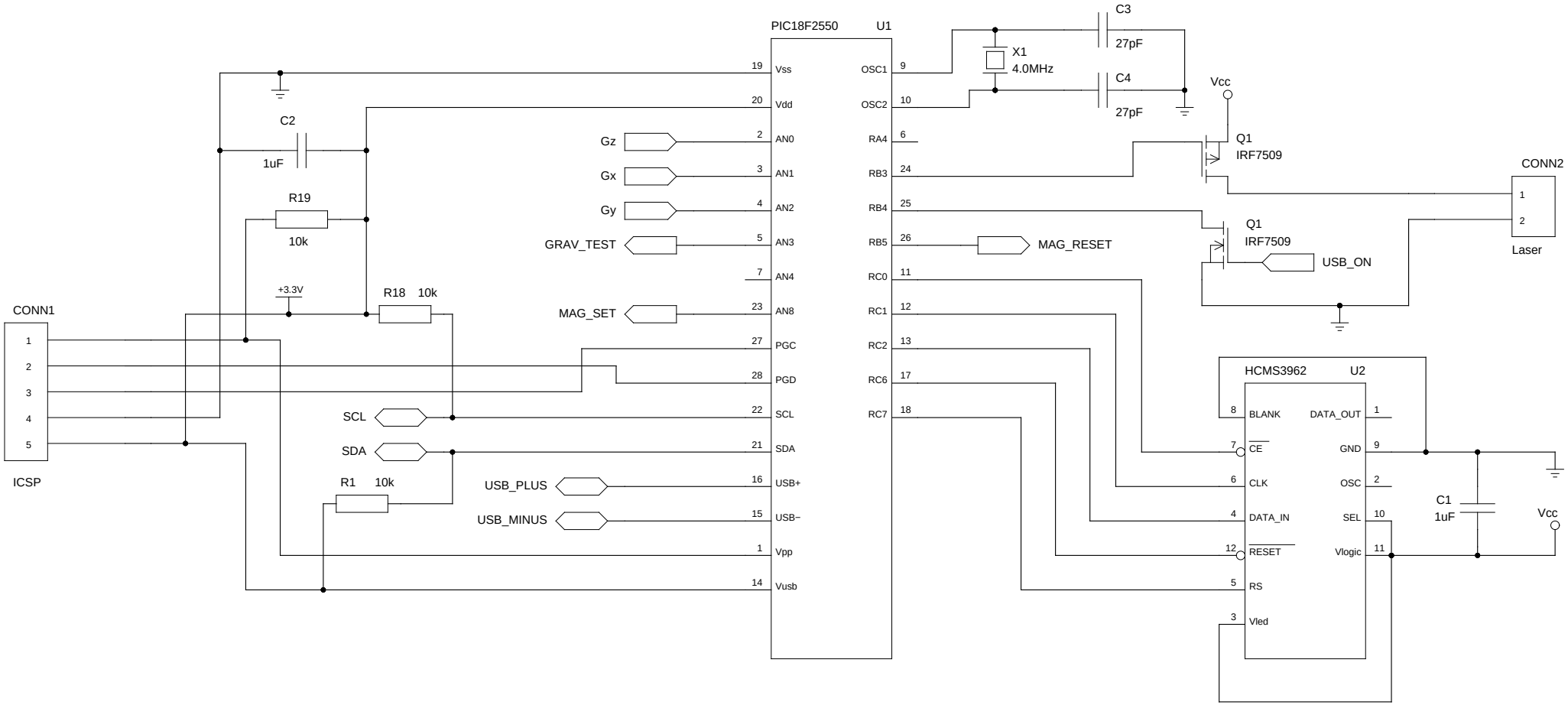
PIC18F2550
U1
C3
27pF
X1
4.0MHz
C4
27pF
Vcc
Q1
IRF7509
CONN2
Laser
Q1
IRF7509
USB_ON
MAG_RESET
C2
1uF
R19
10k
+3.3V
R18 10k
CONN1
ICSP
Gz
Gx
Gy
GRAV_TEST
MAG_SET
SCL
SDA
R1 10k
USB_PLUS
USB_MINUS
Vss
Vdd
AN0
AN1
AN2
AN3
AN4
AN8
PGC
PGD
SCL
SDA
USB+
USB−
Vpp
Vusb
OSC1
OSC2
RA4
RB3
RB4
RB5
RC0
RC1
RC2
RC6
RC7
HCMS3962
U2
BLANK
CE
CLK
DATA_IN
RESET
RS
Vled
DATA_OUT
GND
OSC
SEL
Vlogic
C1
1uF
Vcc

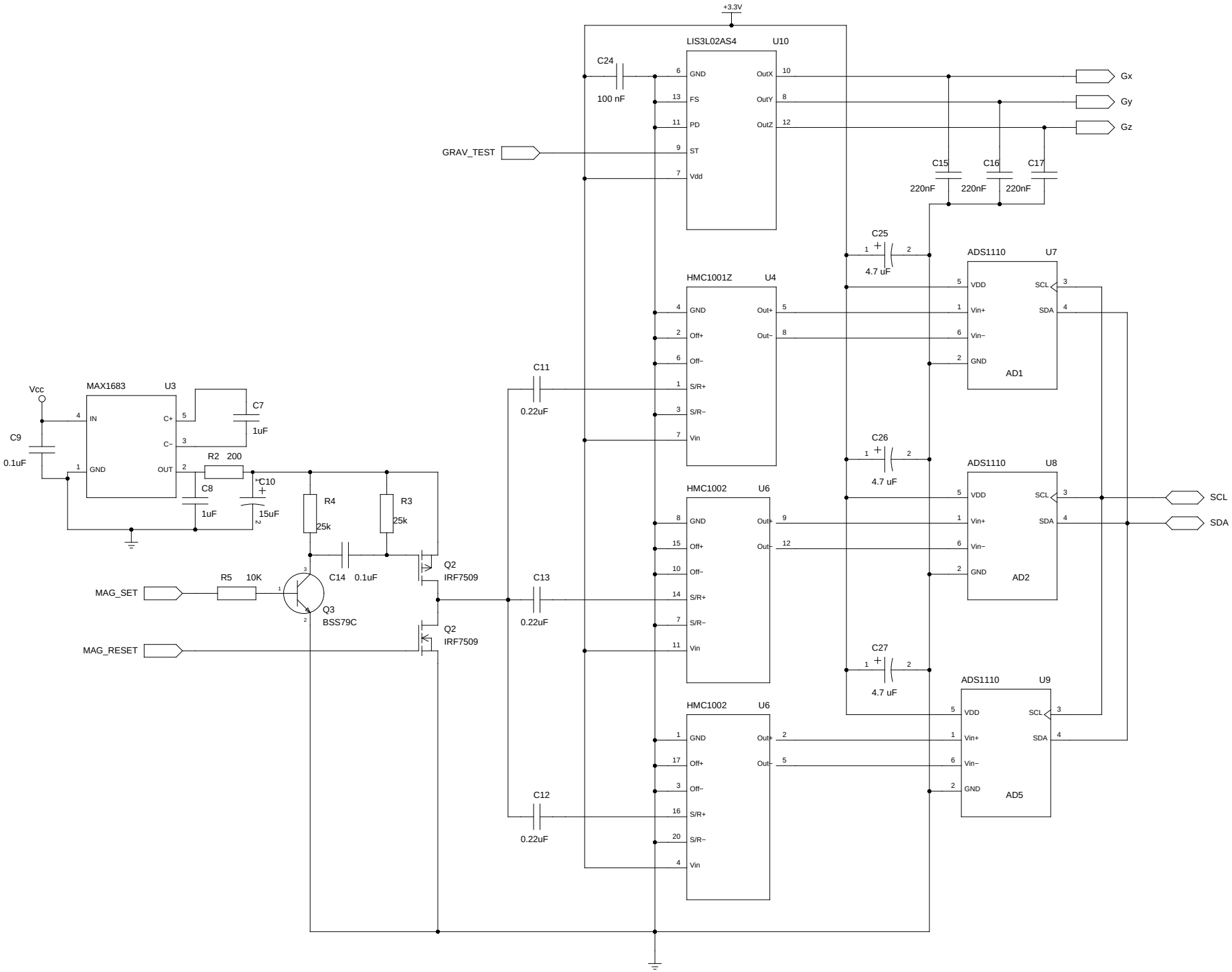
+3.3V
LIS3L02AS4
U10
C24
100 nF
GND
FS
PD
ST
Vdd
OutX
OutY
OutZ
Gx
Gy
Gz
GRAV_TEST
C15
C16
C17
220nF
220nF
220nF
C25
4.7 uF
ADS1110
U7
VDD
Vin+
Vin−
GND
SCL
SDA
AD1
HMC1001Z
U4
Off+
Off−
S/R+
S/R−
Vin
Out+
Out−
C11
0.22uF
C26
4.7 uF
ADS1110
U8
AD2
SCL
SDA
HMC1002
U6
C13
0.22uF
C27
4.7 uF
ADS1110
U9
AD5
HMC1002
U6
C12
0.22uF
Vcc
MAX1683
U3
IN
GND
C+
C−
OUT
C9
0.1uF
C7
1uF
R2 200
C8
1uF
C10
15uF
R4
25k
R3
25k
C14 0.1uF
R5 10K
MAG_SET
Q3
BSS79C
Q2
IRF7509
Q2
IRF7509
MAG_RESET